Description

Compact single point flow monitor with 4 ... 20 mA analogue output and MIN or MAX monitoring options. 10 x LED bar which shows the actual flow speed and the status of the switching point. Suitable for water and air. Available as screw-in type, plug-in type for sensor adapter TP/ball valve BV or push-in type.

Features

- wear-resistant compact design, with stainless steel 1.4571 monitoring head and housing
- 4 ... 20 mA analogue output (4 mA = 0 m/s, 20 mA = operating range final value)
- switch point can be adjusted steplessly or to 10 predefined values regardless of the actual flow speed
- 10 x LED bar (red, green, orange) which shows the actual flow speed and the status of the switching point
- fluid temperature -20 ... 90 °C
- 4-core PVC cable, 4 x 0,34 mm², conductor resistance 56 Ω/km
- signal output with HighSide-FET output
- protected against short circuits and overloads

FC50-dbEX

EU-type-examination certificate to EN IEC 60079-0:2018, EN 60079-1:2014 and EN 60079-31:2014

Ex II 2G Ex db IIC T4 Gb
II 2D Ex tb IIIC T95°C...T120°C Db

Ranges of application

	gases		dust	
category 1	**zone 0**		**zone 20**	
category 2	**zone 1**	✓	**zone 21**	✓
category 3	**zone 2**	✓	**zone 22**	✓

Electrical connection

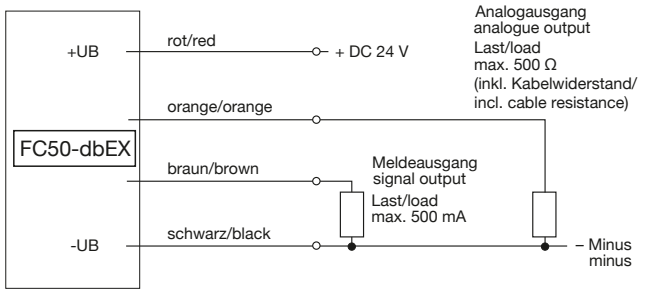

Ordering information

Flow meter (calorimetric)

FC50-dbEX in compact housing

Power supply
- **U1** DC 24 V

Flow switching point
- **MIN** minimum switching point
- **MAX** maximum switching point

Analogue output
- **C11** 4 ... 20 mA (0 m/s ... operating range final value)

Operating range
- **FB2** operating range final value 100 m/s (air), 4 m/s (water)
- **FB1** operating range final value 25 m/s (air), 1 m/s (water)

Fluid
- **A** air
- **W** water
- **S** special fluid (on request, from 25 pieces)

Process connection
- **00** push-in type, length 300 mm - without flange, threaded installation bush as accessory
- **22** push-in type, length 200 mm - without flange, threaded installation bush as accessory
- **01** screw-in type, G1/2A (to DIN 3852-A), length 36 mm
- **02** screw-in type, NPT1/2"-14, length 36 mm
- **11** plug-in type (following DIN ISO 6149), length 18.2 mm for TP or BV adapters

Fitting material
- **M1** stainless steel 1.4571

Cable length
- **Z05** 5 m cable
- **Z10** 10 m cable
- **Z20** 20 m cable
- **Z40** 40 m cable

Certification
- **T5** ATEX approval

FC50-dbEX-	**U1**	**MIN**	**C11**	**FB2**	**A**	**01**	**M1**	**Z05**	**T5**	ordering example

TECHNICAL DATA (T_U = 25 °C, U_B = DC 24 V)		
General data		
Suitable for		air, water
Temperature range	fluid	-20 ... +90 °C
	ambience	-20 ... +65 °C
Status indication		10 x LED bar (red, green, orange)
Electrical data		
Operating voltage U_B		DC 24 V (± 20 %, at the device – please consider voltage drop)
Power consumption (without load)		ca. 75 mA
Analogue output	flow speed	4 ... 20 mA (12 bit), 4 mA = 0 m/s, 20 mA = operating range final value
Switching output	flow speed	Power FET, high side switch, short circuit proof max. load 500 mA, inductive load max. 100 mA
MTTF (SN 29500)		267 years
Flow measurement [6]		
Measuring range (operating range)	air, operating range FB1	0 ... 20 m/s (0 ... 25 m/s) – FB1, see ordering information standard flow speed referred to 20 °C and 1,01325 bar
	air, operating range FB2	0 ... 20 m/s (0 ... 100 m/s) – FB2, see ordering information standard flow speed referred to 20 °C and 1,01325 bar
	water, operating range FB1	0 ... 1 m/s (0 ... 1 m/s) – FB1, see ordering information
	water, operating range FB2	0 ... 3 m/s (0 ... 4 m/s) – FB2, see ordering information
Accuracy [4] (in measuring range)	air	± 2 % of measured value ± 2 % of measuring range final value
	water 0 ... 2 m/s	± 1 % of measured value ± 3 % of measuring range final value
	water 2 ... 3 m/s	± 8 % of measuring range final value
Reproducibility [1]		± 1 % of measured value ± 0,5 % of measuring range final value
Response time	air [3]	approx. 2 s
	water [2]	approx. 1 s
Temperature drift	air (+10 ... +70 °C)	± 0,5 % of measured value/°C
	water (+10 ... +70 °C)	± 1 % of measured value/°C
Mechanical data		
Type and size of monitoring head	plug-in type	following DIN ISO 6149
	screw-in type	G 1/2 A, NPT 1/2”
	push-in type	shank diameter 18 mm/0.709 in. without thread
Pressure resistance of monitoring head		100 bar (observe pressure resistance of installation)
Degree of protection		IP67
Material	fitting	stainless steel 1.4571 (wetted)
	sensor	stainless steel 1.4571 (wetted)
	connection sensor/fitting	laser welded
	housing	stainless steel 1.4571
	cable	PVC
	cable gland	nickel-plated brass, NBR, FKM
	cap	stainless steel 1.4571
	O-ring	EPDM (wetted, plug-in type)
Weight	plug-in type	approx. 905 g
	screw-in type	approx. 815 g
	push-in type 200 mm	approx. 1015 g
	push-in type 300 mm	approx. 1125 g

[1] at constant temperature and flow conditions, and stable thermal conductivity
[2] delay with the switch point set to 1,8 m/s and the flow at 2 m/s, after a sudden complete stop
[3] delay with the switch point set to 18 m/s and the flow at 20 m/s, after a sudden complete stop
[4] the accuracy values were determined under ideal conditions:
- symmetrical complete flow profile
- correct mounting in the pipe
- inlets and outlets according to EN ISO 5167-1

[6] sensor calibration is performed at approx. 25 °C and approx. 970 mbar abs. (punctual measurement)

Operating range FB2 air

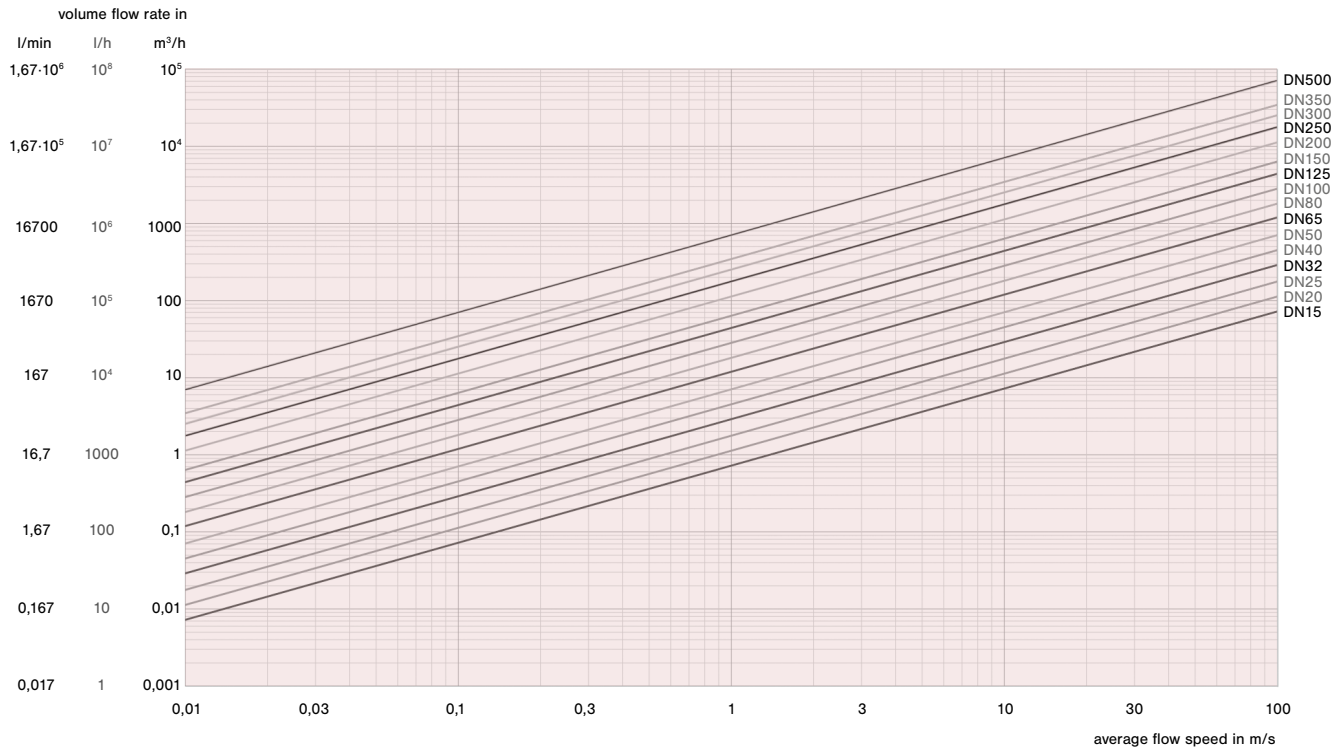

Operating range water

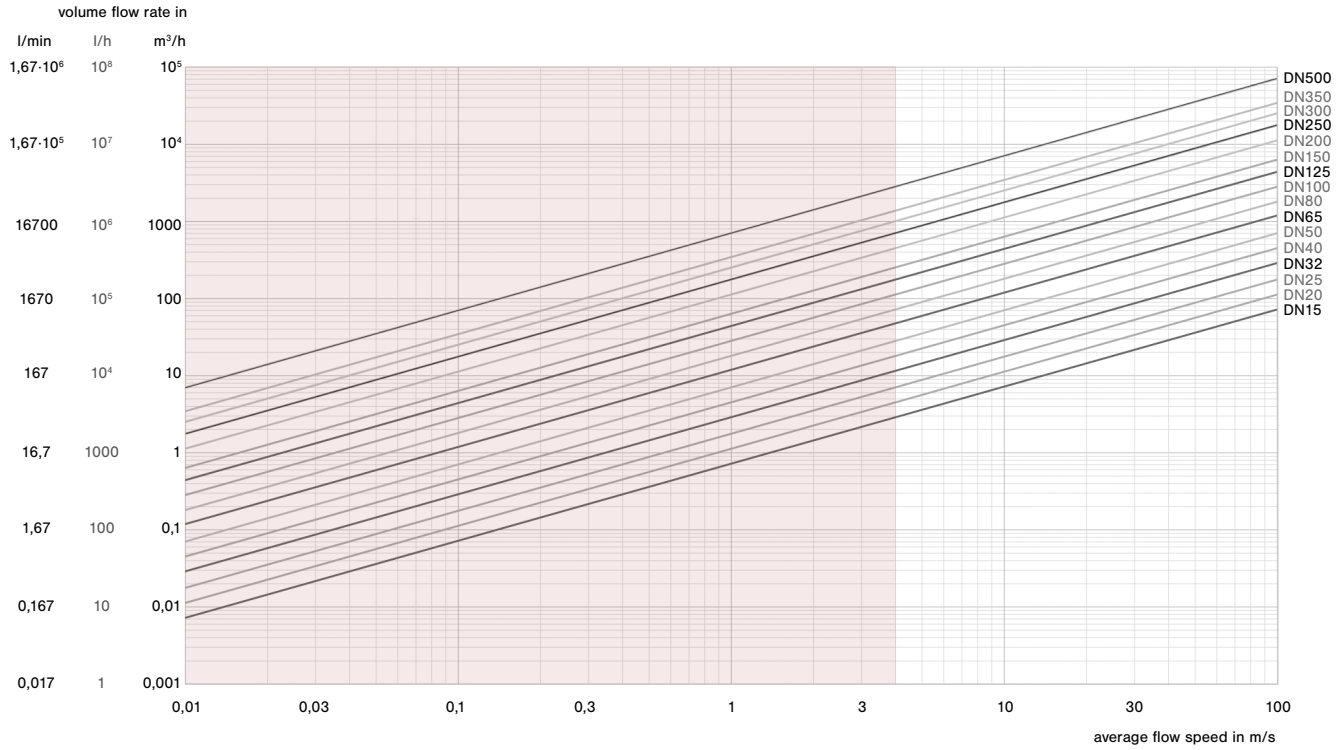

Dimensions

Gewindeanschluss
Screw-in type process connection

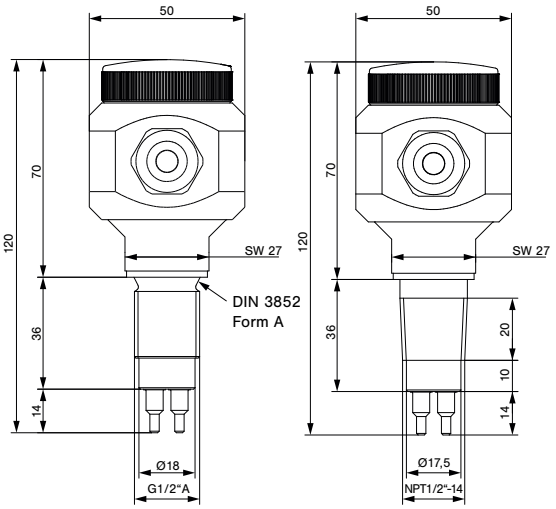

Einsteckanschluss
Plug-in type process connection

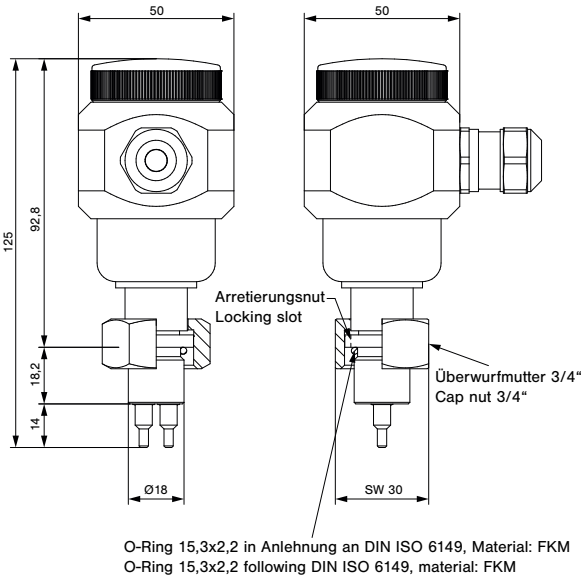

Einschiebeanschluss
Push-in type process connection

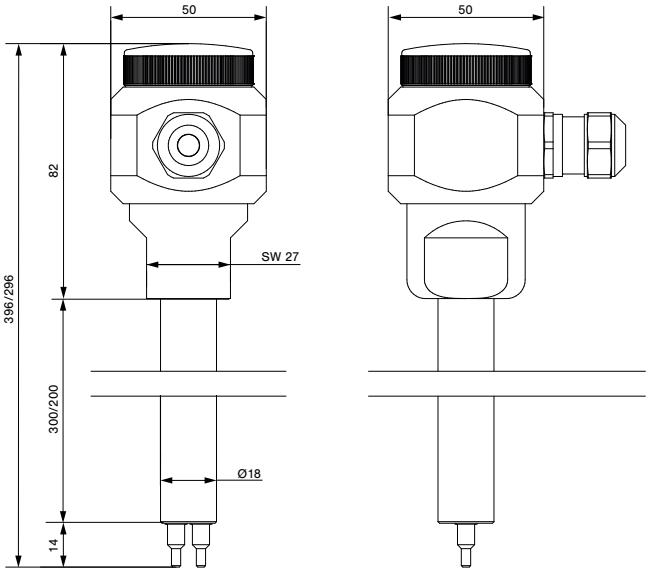

Alle Abmessungen in mm
All dimensions in mm

Sensor adapter TP/Ball valve BV

TP-... BV-...

Description

Sensor adapters TP and BV facilitate correct positioning and exchange of FC50-...11... (plug-in type connection) in pipes with process connection DN 15...DN 50.
Ball valve BV enables pressure-free installation or removal of FC50-...11... (plug-in type connection) simply by closing the input and output pipe. The measuring points are suited to temporary measurements; after completion of the measuring cycle they can be closed by means of blanking plugs.

Ordering information

Type					
BV	ball valve with internal thread				
	Process connection/Nominal size				
	03	DN 25	G1	internal thread	length: 88 mm/3.46 in.
	04	DN 32	G1 1/4	internal thread	length: 100 mm/3.94 in.
	05	DN 40	G1 1/2	internal thread	length: 110 mm/4.33 in.
	06	DN 50	G2	internal thread	length: 131 mm/5.16 in.
			Material of the area exposed to fluid		
			M3	nickel plated brass, Delrin seal	
BV -	**03**		**M3**	ordering example	

Features

- Correct positioning of sensor
- Ease of sensor replacement
- Measuring point can be closed if not used
- Sensor adapter available as screw-in or welding type
- Ball valve also serves as a shutoff valve (both input and out output)

Accessories

Description	Ref. No.
Blanking plug, brass, with O ring	0Z121Z000186
Union nut, brass	Y 306 901 01
Blanking plug, stainless steel 1.4571/AISI 316 Ti, with viton O ring	0Z121Z000187
Union nut, stainless steel	Y 306 901 03

Welding set 05
0Z122Z000202

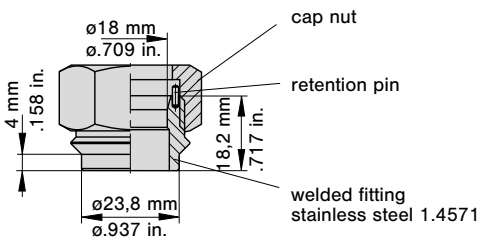

Ordering information

Type					
TP	Sensor adapter with internal thread				
	Process connection/Nominal size				
	01	DN 15	G 1/2	internal thread	length: 50 mm/1.97 in.
	02	DN 20	G 3/4	internal thread	length: 64 mm/2.52 in.
	03	DN 25	G1	internal thread	length: 78 mm/3.07 in.
	04	DN 32	G1 1/4	internal thread	length: 94 mm/3.70 in.
	05	DN 40	G1 1/2	internal thread	length: 110 mm/4.33 in.
	06	DN 50	G2	internal thread	length: 138 mm/5.43 in.
			Material of the area exposed to fluid		
			M1	stainless steel 1.4571/AISI 316Ti	PN 315 bar/4570 psi
			M3	brass (not TP-03..)	PN 25 bar/363 psi
			M5	red brass (only TP-03..)	PN 16 bar/232 psi
TP -	**01**		**M3**	ordering example	

Ordering information

Type					
TP	Sensor adapter with welding nipples				
	Process connection/Nominal size				
	01	DN 15	dia.d: 16 mm/.630 in.		length: 80 mm/3.15 in.
	02	DN 20	dia.d: 20 mm/.787 in.		length: 70 mm/2.76 in.
	03	DN 25	dia.d: 25 mm/.984 in.		length: 80 mm/3.15 in.
	04	DN 32	dia.d: 32 mm/1.26 in.		length: 100 mm/3.94 in.
	05	DN 40	dia.d: 40 mm/1.57 in.		length: 110 mm/4.33 in.
	06	DN 50	dia.d: 50 mm/1.97 in.		length: 140 mm/5.51 in.
			Material of the area exposed to fluid		
			M1	stainless steel 1.4571/AISI 316Ti	
				Process connection	
				SA	welded connection
TP -	**01**		**M1 -**	**SA**	ordering example

Dimensions

TP-... sensor adapter with internal thread

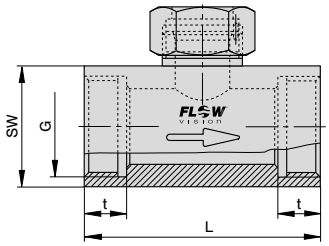

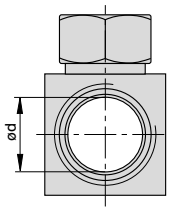

SW = width across flats

Material stainless steel (-M1): PN 315 bar / 4569 psi
Material brass (-M3): PN 25 bar / 363 psi
Material red brass (-M5): PN 16 bar / 232 psi

Type	DN		dia. d		G	t		L		SW	
	mm	in.	mm	in.	in.	mm	in.	mm	in.	mm	in.
TP-01 ...	15	.591	16	.630	1/2"	11	.433	50	1.97	27	1.06
TP-02 ...	20	.787	20	.787	3/4"	12	.472	64	2.52	32	1.26
TP-03 ...	25	.984	25	.984	1"	14	.551	78	3.07	40	1.57
TP-04 ...	32	1.26	32	1.26	1.1/4"	15	.591	94	3.70	50	1.97
TP-05 ...	40	1.57	40	1.57	1.1/2"	15	.591	110	4.33	55	2.16
TP-06 ...	50	1.97	50	1.97	2"	19	.748	138	5.43	70	2.76

TP-... M1-SA sensor adapter with welding nipples

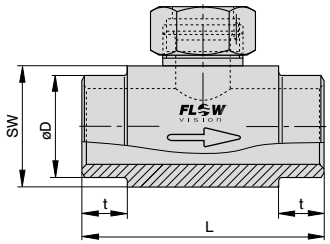

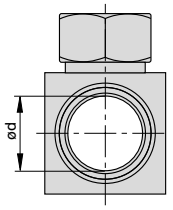

PN 315 bar / 4569 psi

Type	DN		dia. d		dia. D		t		L		SW	
	mm	in.	mm	in.	mm	in.	mm	in.	mm	in.	mm	in.
TP-01M1-SA	15	.591	16	.630	21.3	.839	15	.591	80	3.15	27	1.06
TP-02M1-SA	20	.787	20	.787	26.9	1.06	15	.591	70	2.76	32	1.26
TP-03M1-SA	25	.984	25	.984	33.7	1.33	15	.591	80	3.15	40	1.57
TP-04M1-SA	32	1.26	32	1.26	42.4	1.67	15	.591	100	3.94	50	1.97
TP-05M1-SA	40	1.57	40	1.57	48.3	1.90	15	.591	110	4.33	55	2.16
TP-06M1-SA	50	1.97	50	1.97	60.3	2.37	15	.591	140	5.51	70	2.76

BV-... M3 Ball valve with internal thread

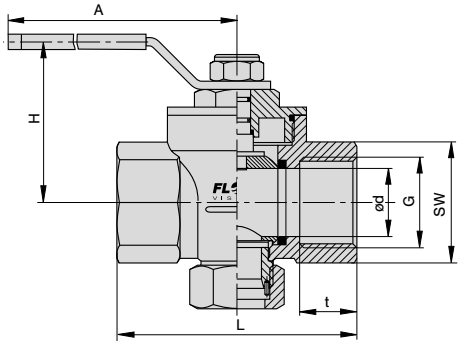

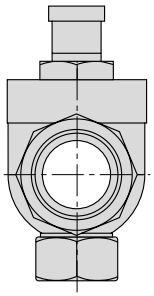

PN 25 bar / 363 psi

Type	DN		dia. d		G	t		L		SW		H		A	
	mm	in.	mm	in.	in.	mm	in.	mm	in.	mm	in.	mm	in.	mm	in.
BV-03M3	25	.984	25	.984	1"	21	.827	88	3.47	41	1.61	59	2.32	115	4.53
BV-04M3	32	1.26	32	1.26	1.1/4"	24	.945	100	3.94	50	1.97	65	2.56	115	4.53
BV-05M3	40	1.57	40	1.57	1.1/2"	24	.945	110	4.33	54	2.13	77	3.03	150	5.91
BV-06M3	50	1.97	50	1.97	2"	28	1.10	131	5.16	70	2.76	85	3.35	150	5.91

This is a metric design and millimeter dimensions take precedence

Compression fitting

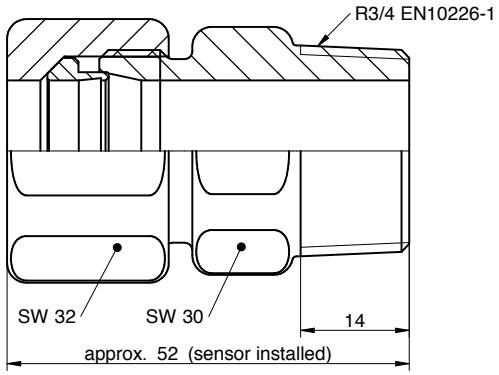

Description and ordering information

Compression fitting for push-in sensors with R3/4 thread

Compression fitting for push-in sensors						
EEF	Compression fitting					
	Process connection					
	04	Thread R3/4				
		Material double nipple and cap nut				
		M1	Stainless steel 1.4571			
		M2	Hastelloy C4 2.4610			
			Material clamping ring			
			CR1	Stainless steel 1.4571	PN 25 bar abs.	
			CR2	PTFE	PN 5 bar abs.	
			CR3	Hastelloy C4 2.4610	PN 25 bar abs.	
EEF -	**04 -**	**M1 -**	**CR1**	ordering example		

Hygiene flange

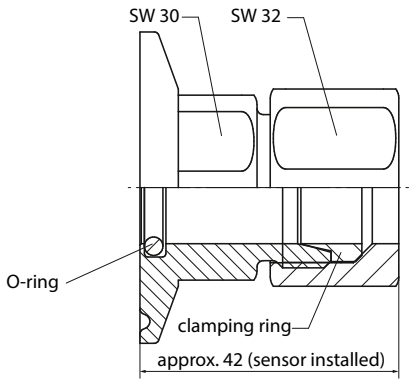

Description and ordering information

Hygiene flange for push-in sensors with front-flush o-ring with FDA approval

Hygiene flange for push-in sensors						
HEF	Hygiene flange					
	Process connection					
	TF1	Triclamp DIN 32676				
		Material flange and cap nut				
		M1	Stainless steel 1.4571			
		M2	Hastelloy C4 2.4610			
			O-ring			
			R1	VMQ (Silicone) blue FDA (standard)		
			R2	VMQ (Silicone) white FDA		
				Material clamping ring		
				CR1	Stainless steel 1.4571	PN 25 bar abs.
				CR2	PTFE	PN 5 bar abs.
				CR3	Hastelloy C4 2.4610	PN 25 bar abs.
HEF -	**TF1 -**	**M1 -**	**R1 -**	**CR1**	ordering example	

Locking set

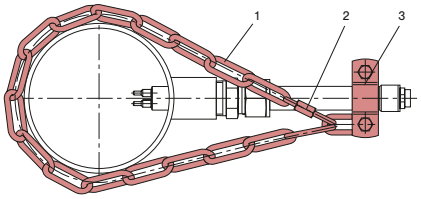

Description and ordering information

Locking set for push-in sensors.

1 Chain 4 x 32 DIN 5685 (approx. 1 m)
2 Catch for chain NG 5
3 Clip with screw and nuts DN15 to DIN 11850

Ordering no.: 0Z122Z000204

Ball valve for installation under pressure

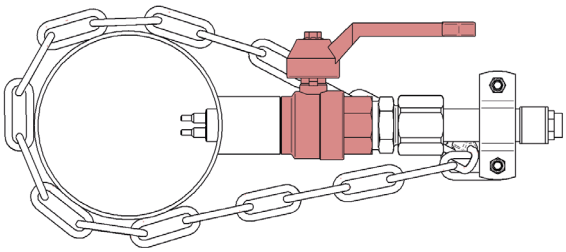

Description and ordering information

Material (body, ball):
Brass nickel plated
Material (ball seal): PTFE
Length: 65 mm
Outside thread: G3/4“, L = 13 mm
Inside thread: G3/4“, L = 15 mm
Fluid temperature: -20...120 °C
Ambient temperature: 0...80 °C
Pressure: PN 25 bar (up to 80 °C)
Ordering number: BV-02M3-PI

Material (body, ball):
Stainless steel 1.4408, 1.4401
Material (ball seal): PTFE
Length: 78 mm
Outside thread: R3/4“, L = 17 mm
Inside thread: Rp3/4“, L = 13 mm
Fluid temperature: -30...180 °C
Ambient temperature: 0...80 °C
Pressure: PN 64 bar (up to 80 °C)
Ordering number: BV-02M15-PI